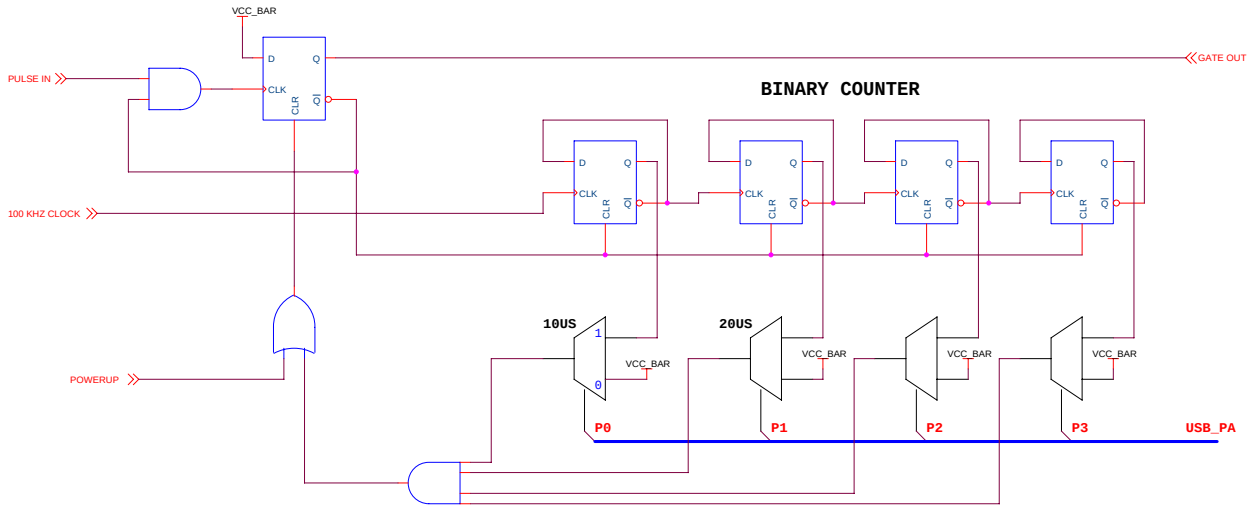

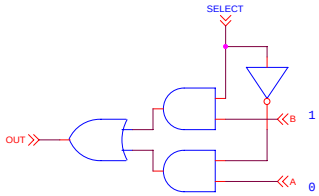

AND-OR-SELECT MULTIPLEXER

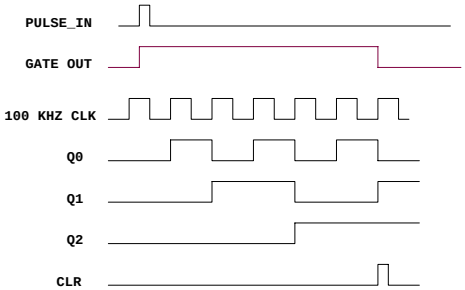

P3	P2	P1	P0	GATE TIME
0	0	0	0	NONE
0	0	0	1	10 US
0	0	1	0	20 US
0	0	1	1	30 US
0	1	0	0	40 US
0	1	0	1	50 US
0	1	1	1	60 US
-	-	-	-	-
1	1	1	1	140 US

Title	SELECTABLE TRIGGER GATE	
Size C	Document Number XXXX	Rev ~
Date: Friday, September 07, 2007	Sheet 1 of 1	